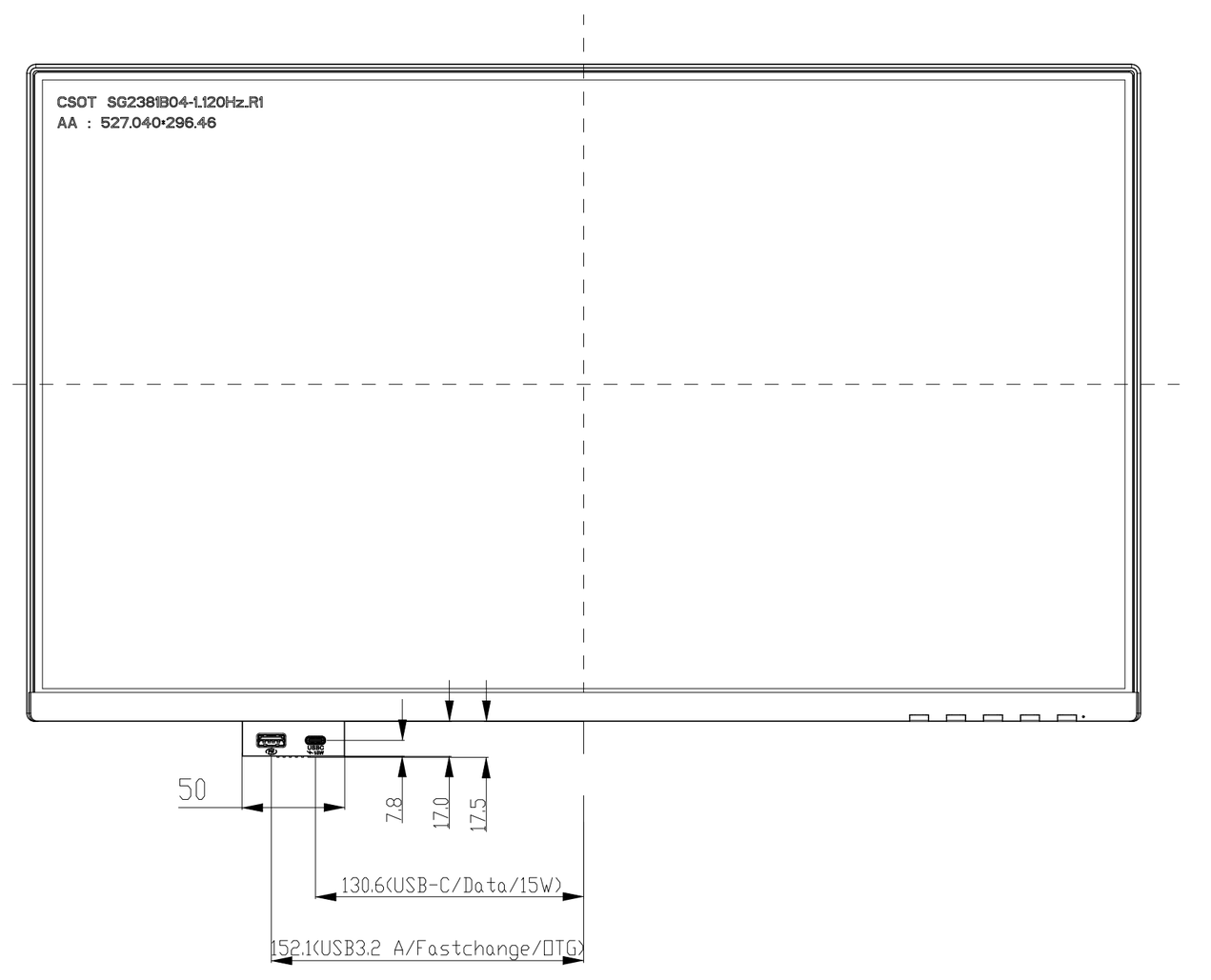
CSOT SG2381B04-1.120Hz.R1
AA : 527.040*296.46
50
7.8
17.0
17.5
130.6(USB-C/Data/15W)
152.1(USB3.2 A/Fastchange/OTG)

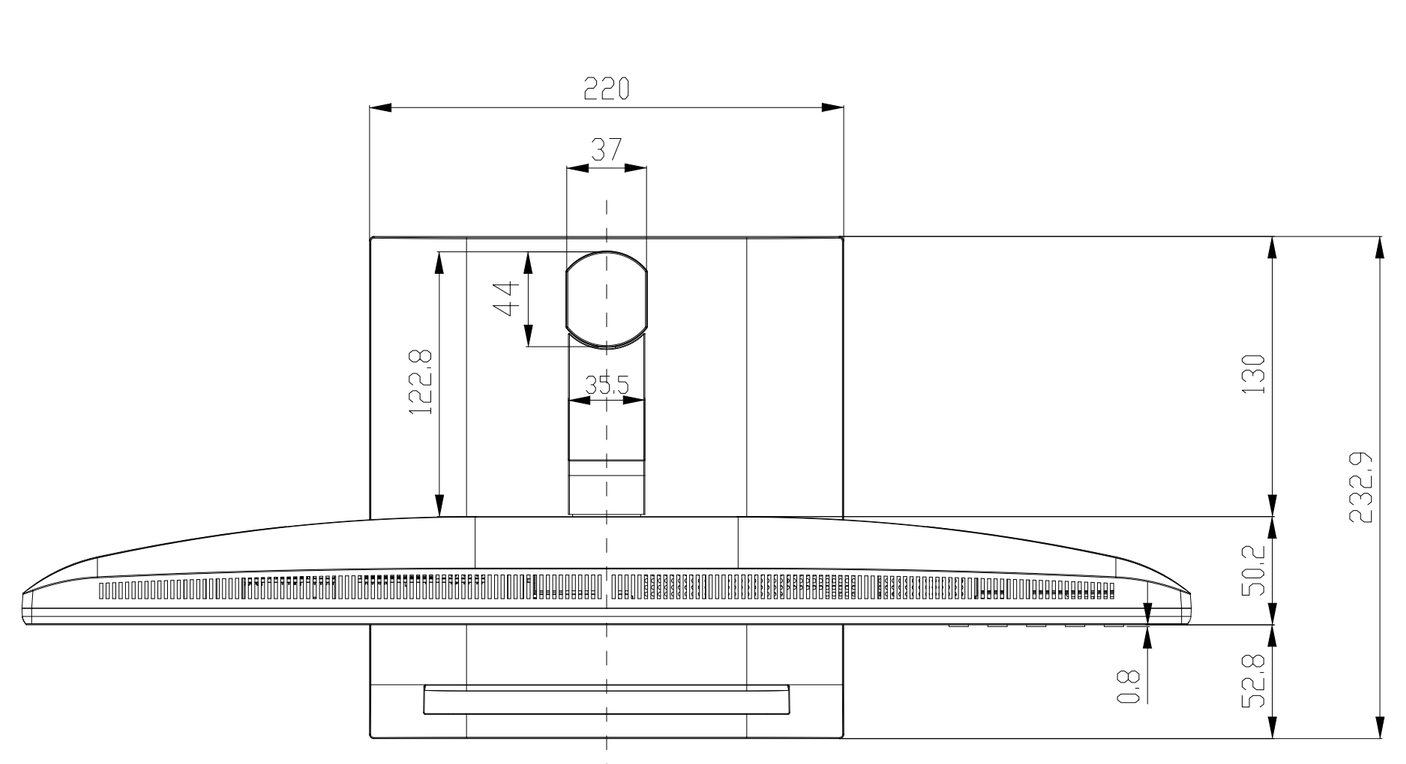
220
37
44
122.8
35.5
130
232.9
50.2
52.8
0.8

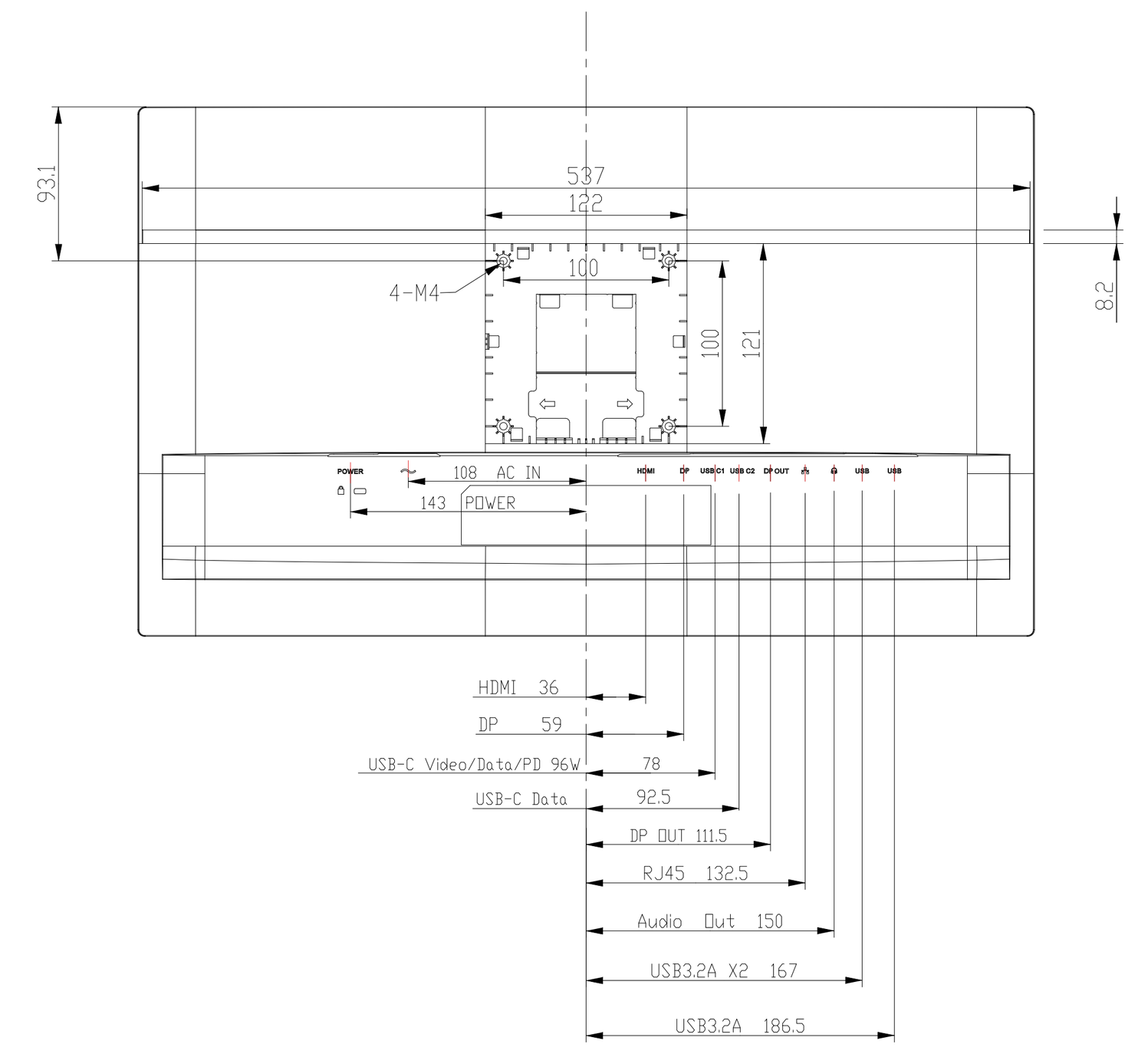
93.1
537
122
100
4-M4
100
121
8.2
POWER
108 AC IN
143 POWER
HDMI
DP
USB C1
USB C2
DP OUT
USB
USB
HDMI 36
DP 59
USB-C Video/Data/PD 96W 78
USB-C Data 92.5
DP OUT 111.5
RJ45 132.5
Audio Out 150
USB3.2A X2 167
USB3.2A 186.5

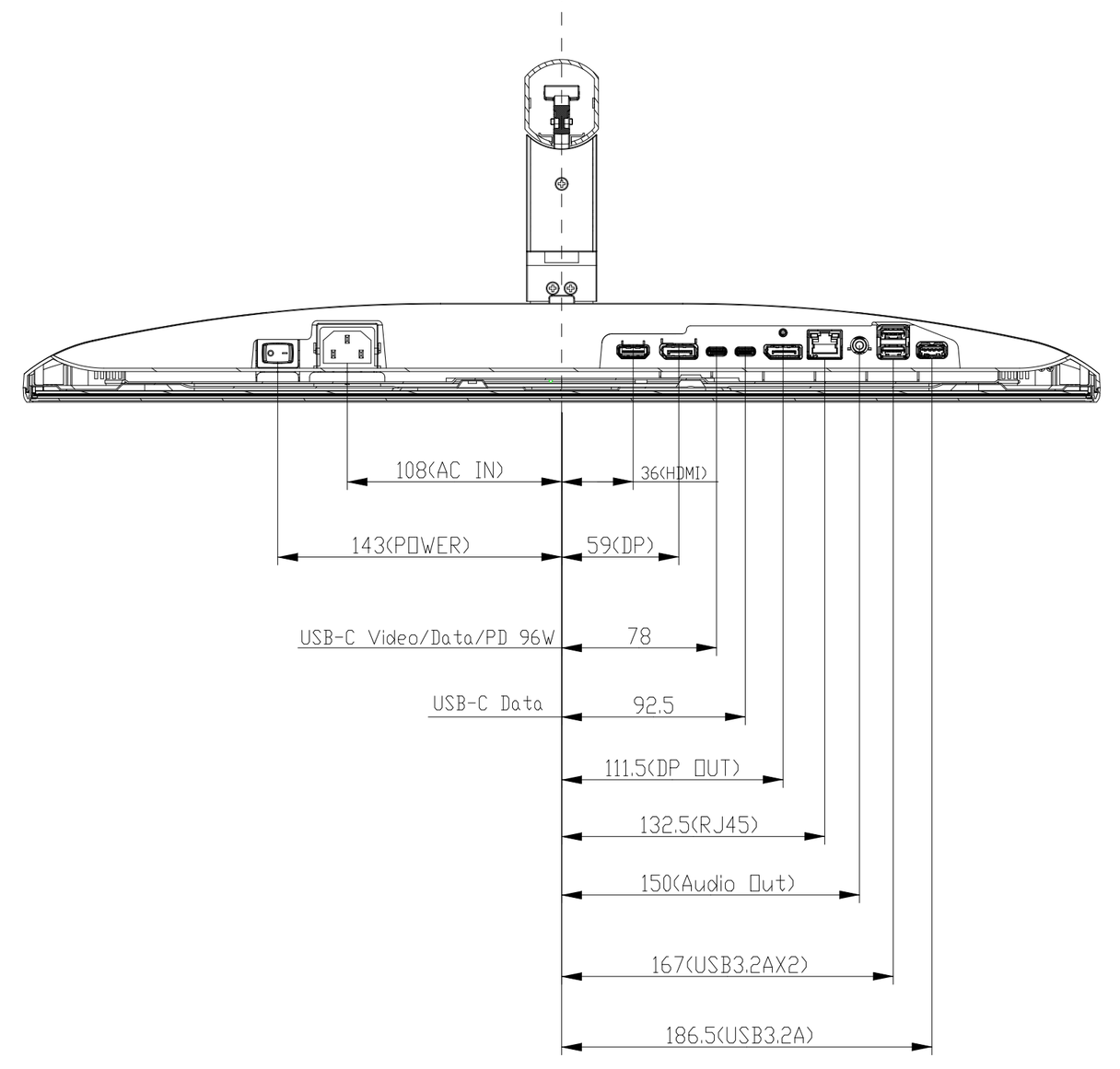
108(AC IN)
36(HDMI)
143(POWER)
59(DP)
USB-C Video/Data/PD 96W
78
USB-C Data
92.5
111.5(DP OUT)
132.5(RJ45)
150(Audio Out)
167(USB3.2AX2)
186.5(USB3.2A)

IO Bottom – IO Bottom

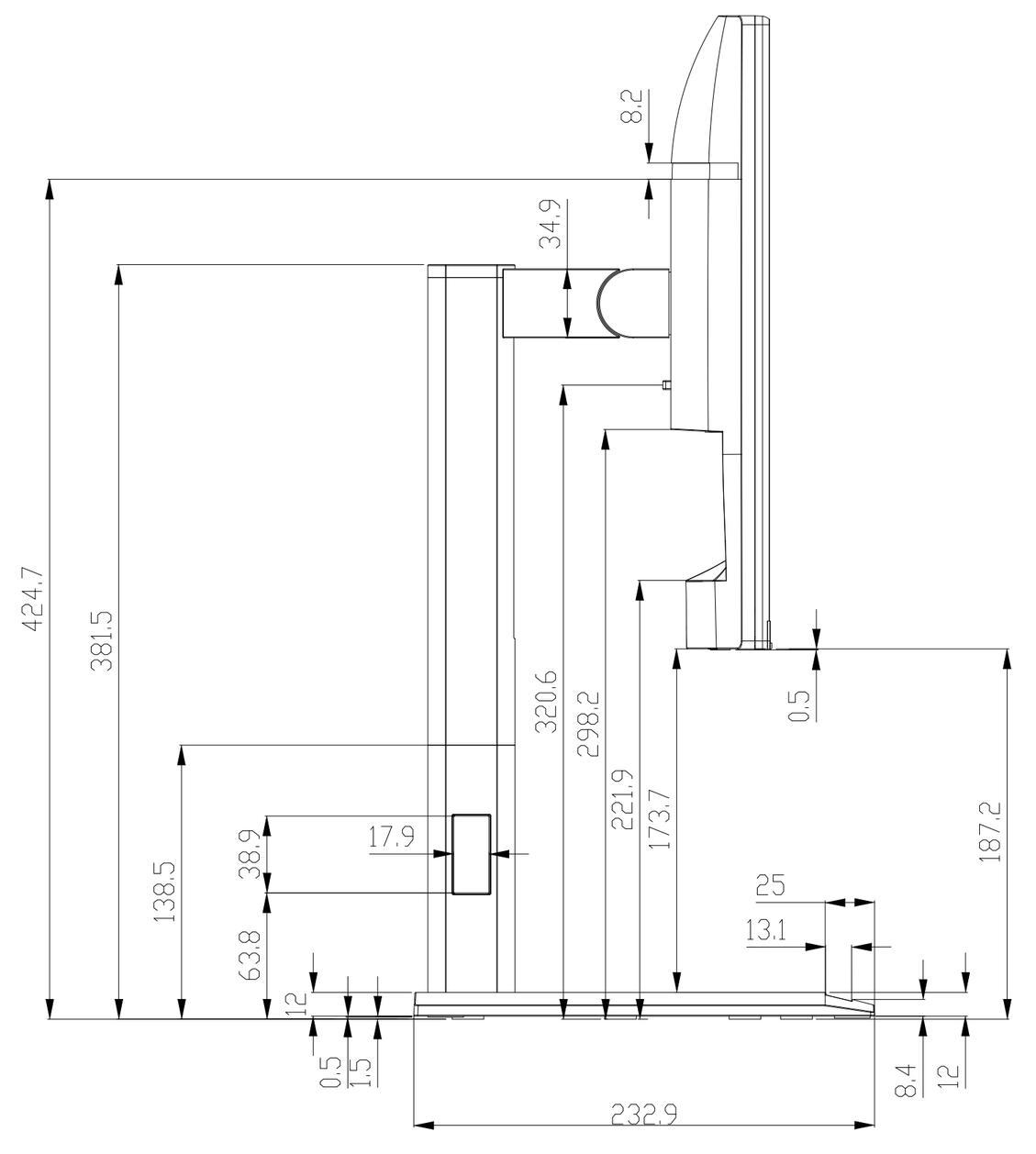
8.2
34.9
424.7
381.5
320.6
298.2
221.9
173.7
0.5
187.2
138.5
38.9
17.9
63.8
25
13.1
12
0.5
1.5
8.4
12
232.9

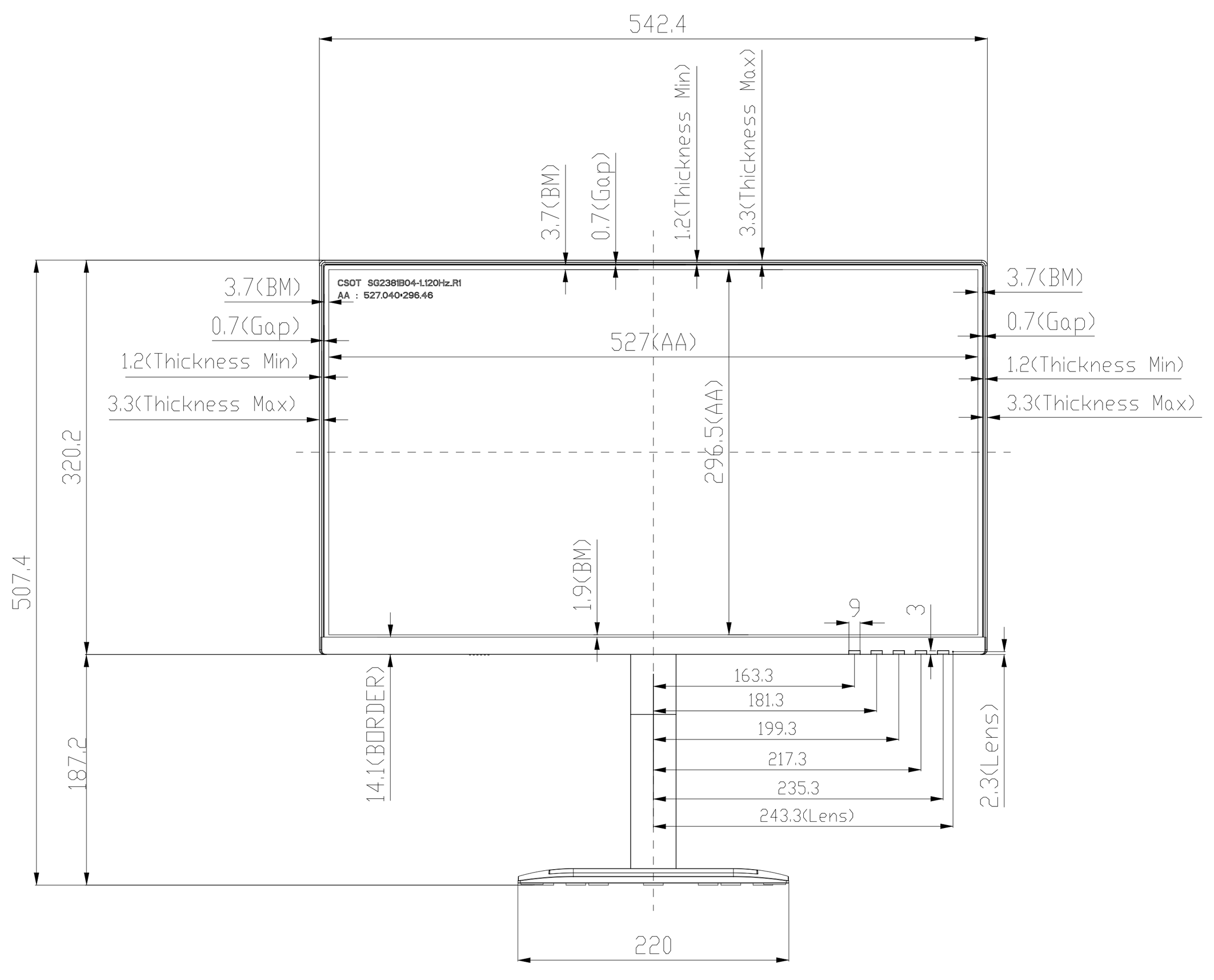
542.4
3.7(BM)
0.7(Gap)
1.2(Thickness Min)
3.3(Thickness Max)
3.7(BM)
0.7(Gap)
1.2(Thickness Min)
3.3(Thickness Max)
3.7(BM)
0.7(Gap)
1.2(Thickness Min)
3.3(Thickness Max)
CSOT SG2381B04-1.120Hz.R1
AA : 527.040*296.46
527(AA)
296.5(AA)
320.2
507.4
1.9(BM)
9
3
163.3
181.3
199.3
217.3
235.3
243.3(Lens)
2.3(Lens)
14.1(BORDER)
187.2
220

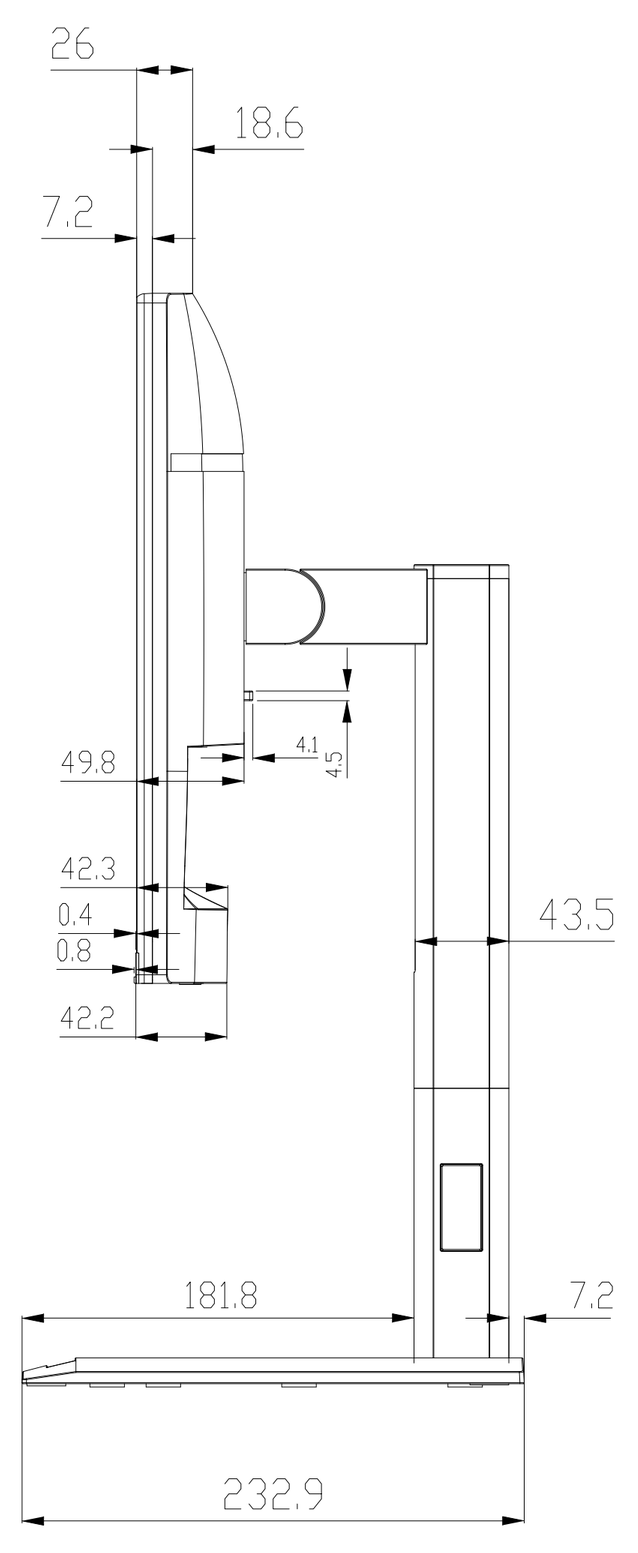
26
18.6
7.2
49.8
4.1
4.5
42.3
0.4
0.8
42.2
43.5
181.8
7.2
232.9

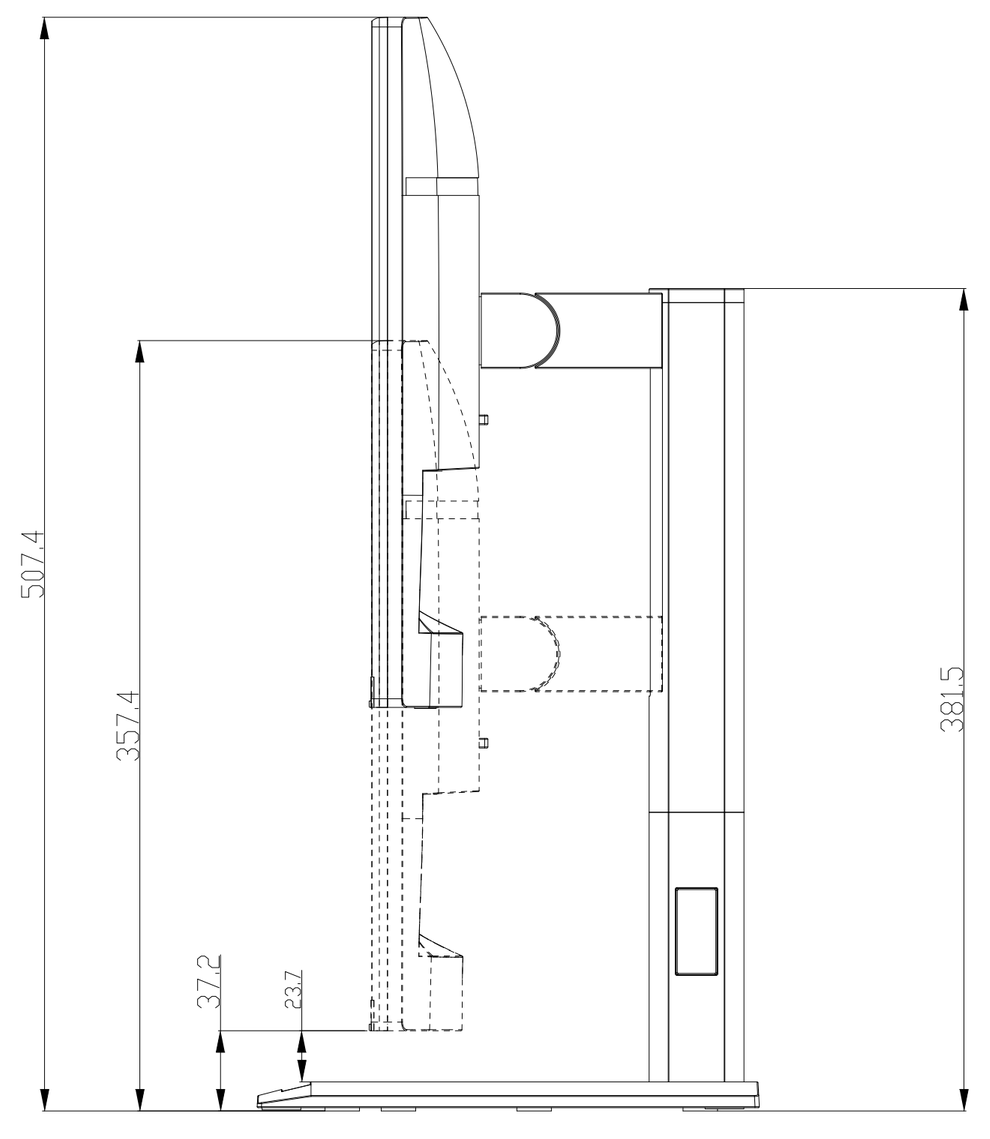
507.4
357.4
37.2
23.7
381.5

LIFT:150MM

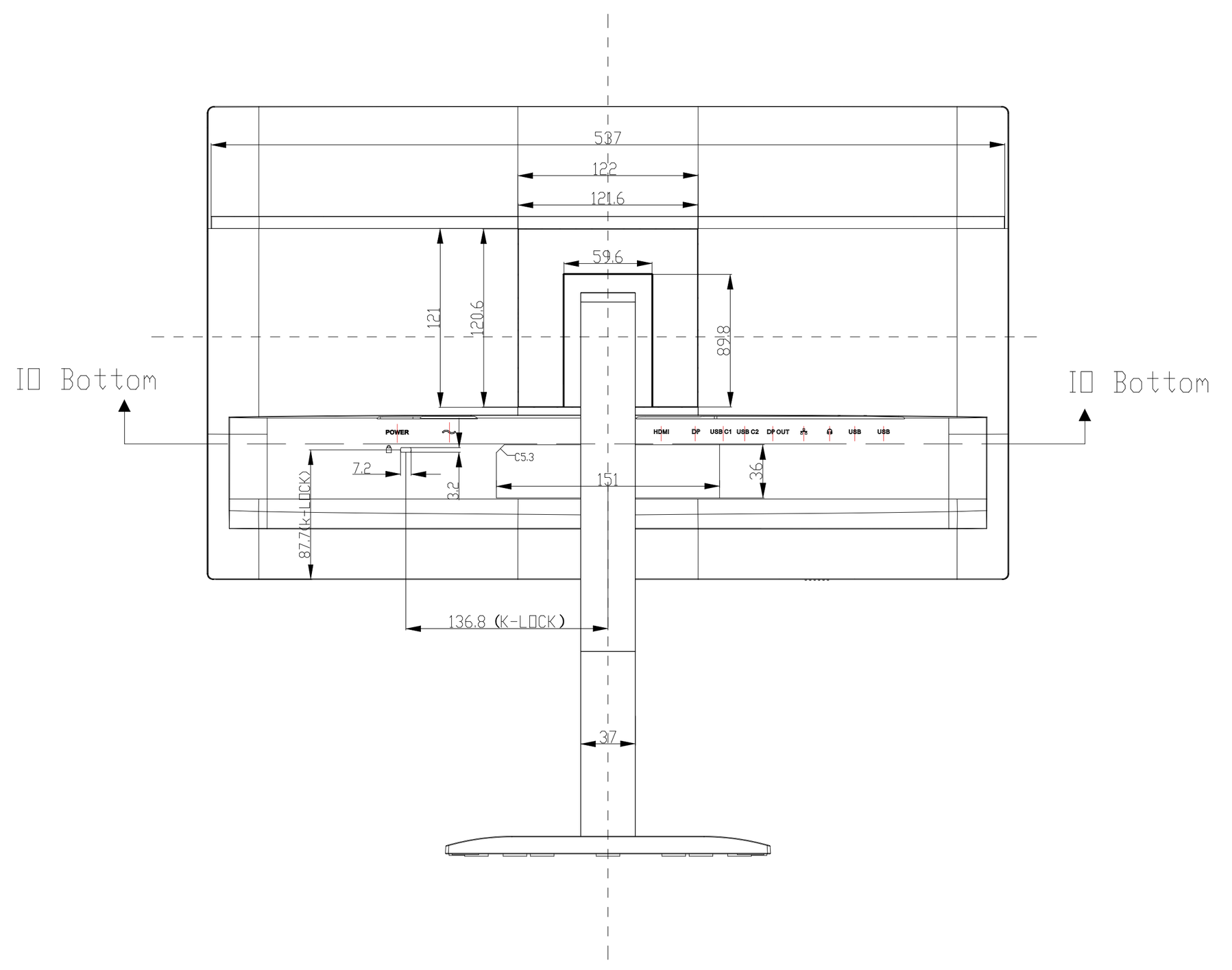
537
122
121.6
59.6
121
120.6
89.8
IO Bottom
IO Bottom
POWER
7.2
3.2
C5.3
151
36
87.7(K-LOCK)
136.8 (K-LOCK)
37

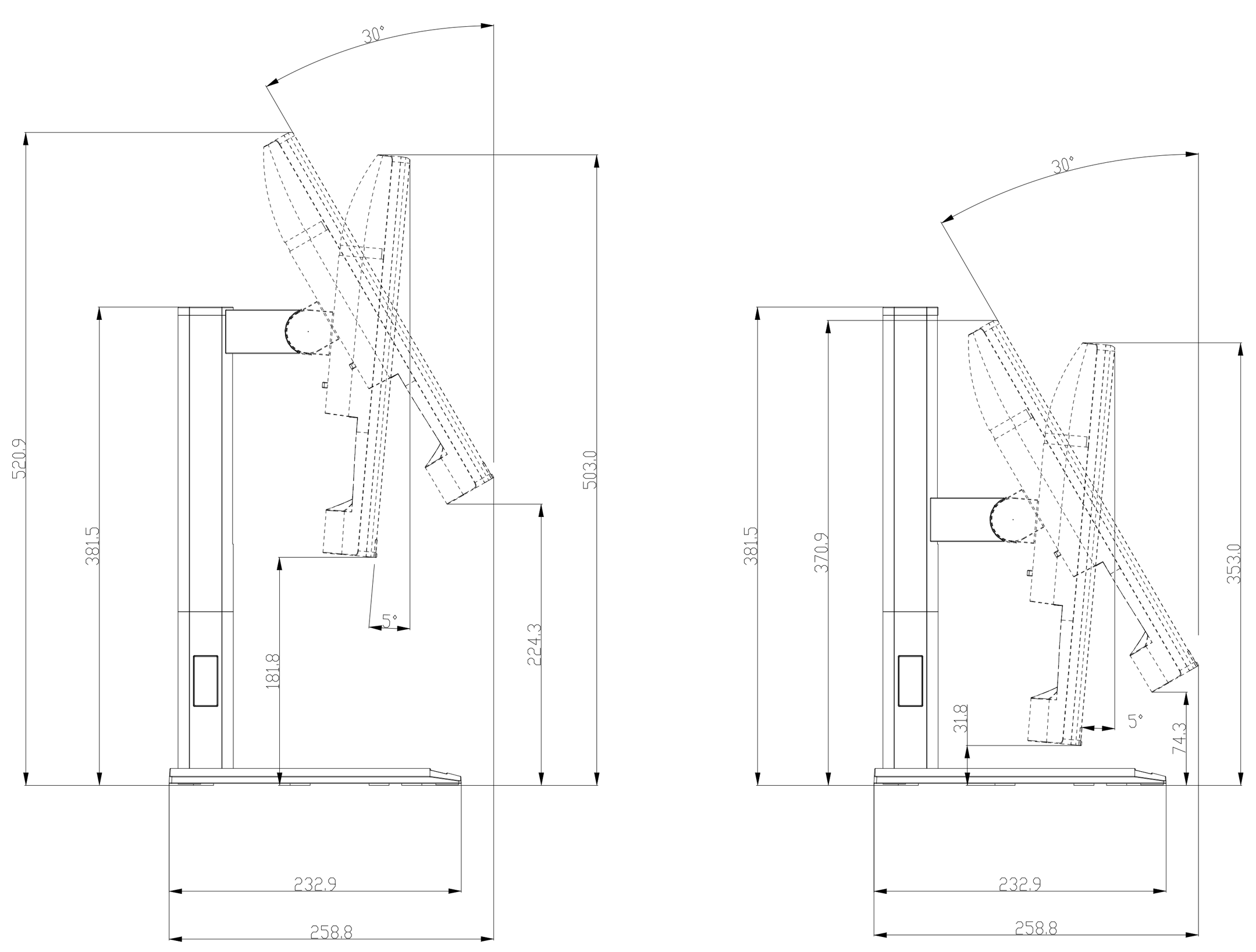
30°
520.9
381.5
181.8
5°
224.3
503.0
232.9
258.8
30°
381.5
370.9
31.8
5°
74.3
353.0
232.9
258.8

TILT:-5°~30°

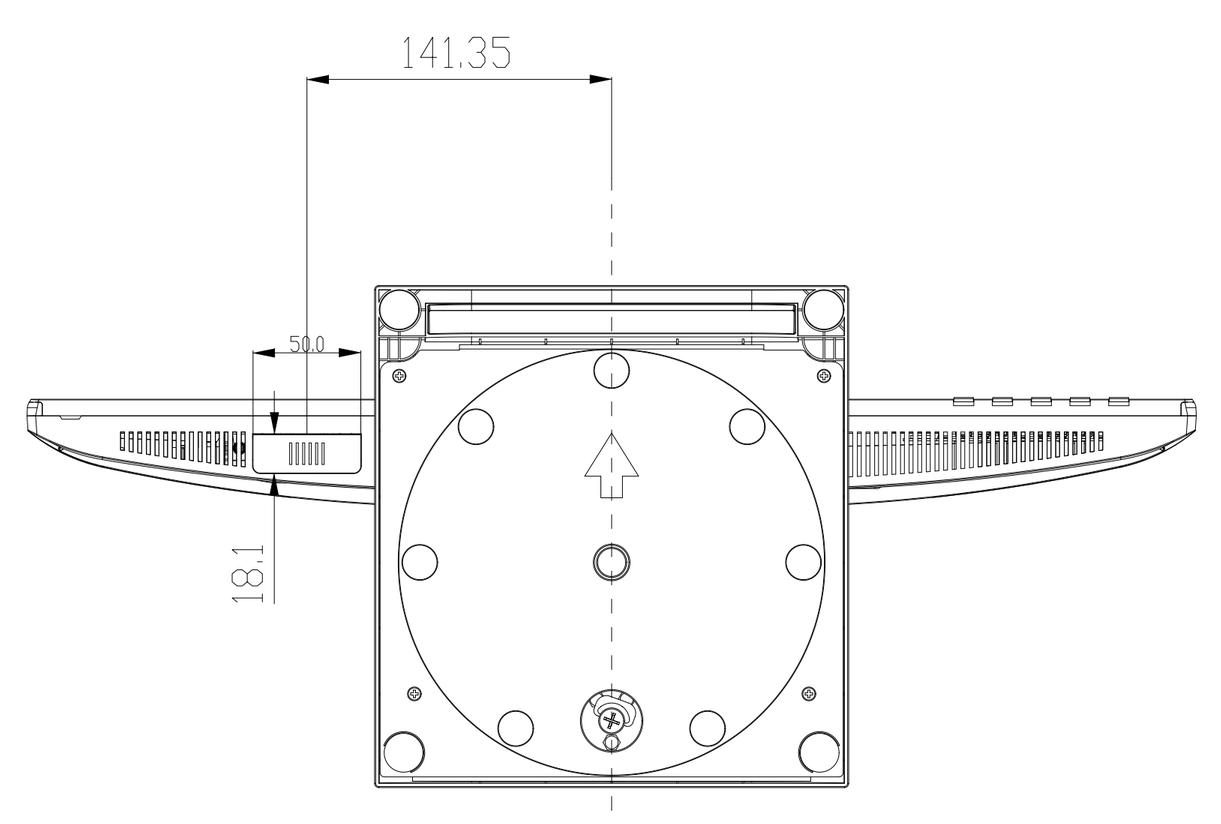
141.35
50.0
18.1

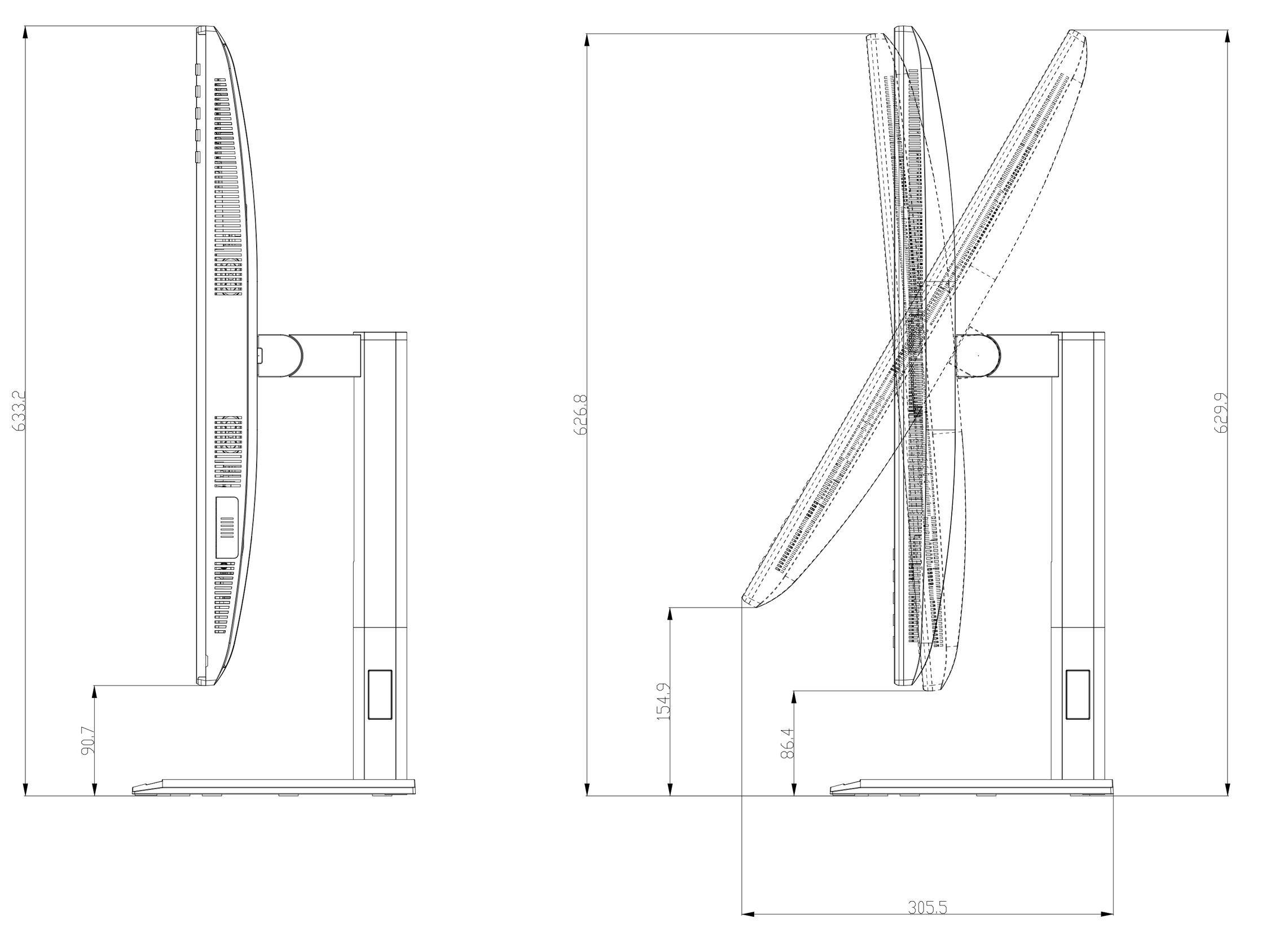
633.2
90.7
626.8
154.9
86.4
629.9
305.5

PIVOT:±90°

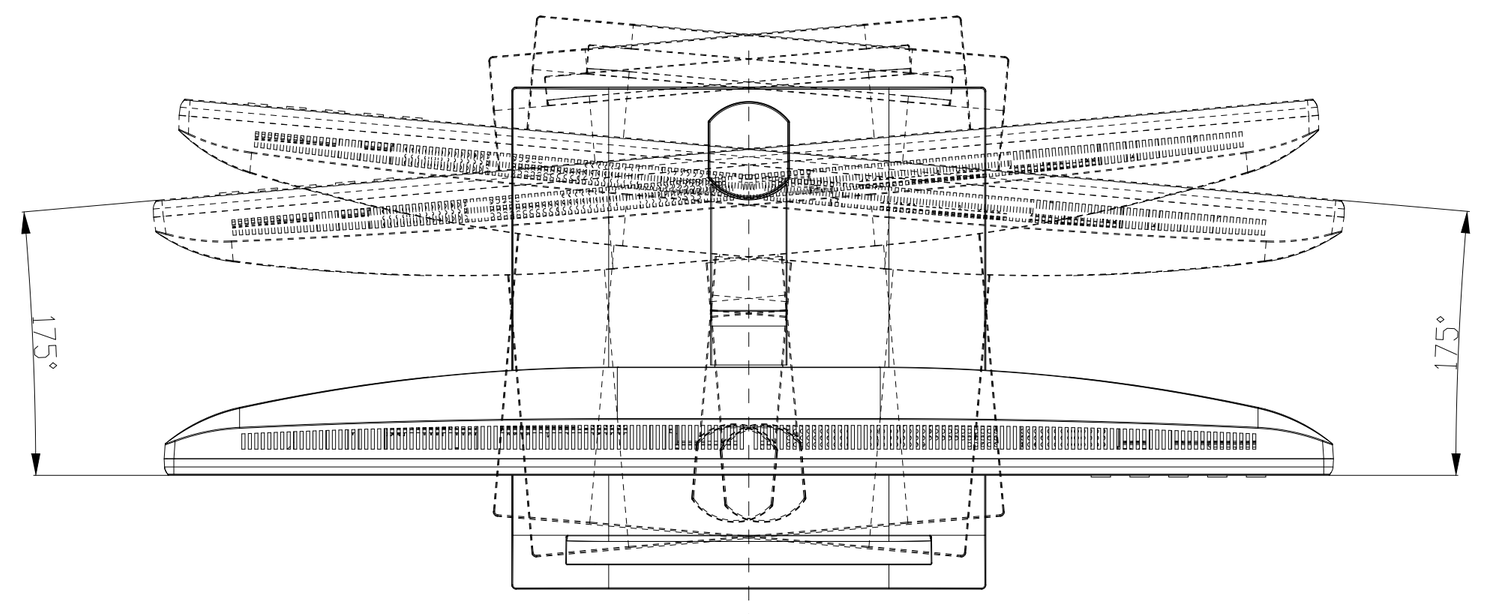

SWIVEL:±175°

Model: 24P4CV		Draw: Guihui
Unit mm	24P4CV_SHT191	
SCALE 1:1	3rd PROJ.	SPEC: 1.TILT:-5°~30° 4.PIVOT:±90° 2.LIFT:150MM 3.SWIVEL:±175°
e-005;SUPERS	AOC	1-1
e-005;DATE 24_JUNE_2025		FQ MNT