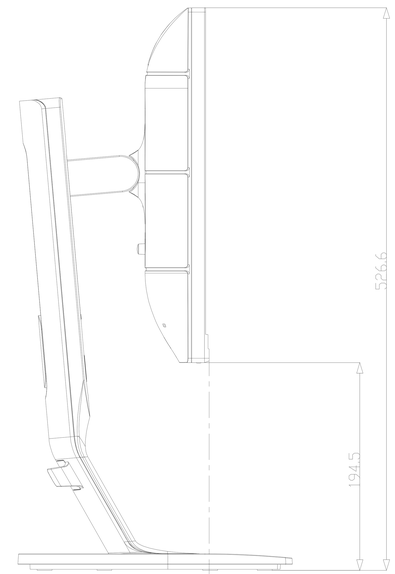

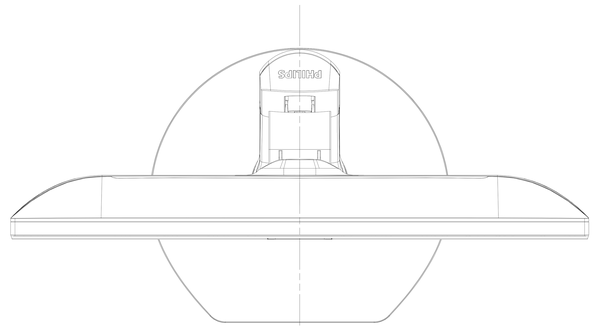

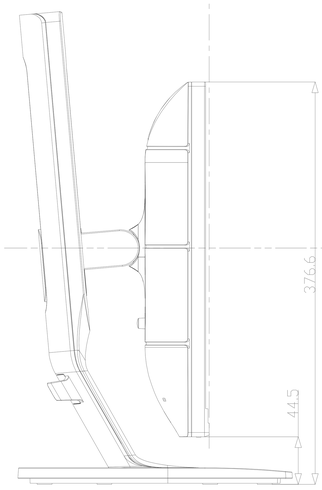

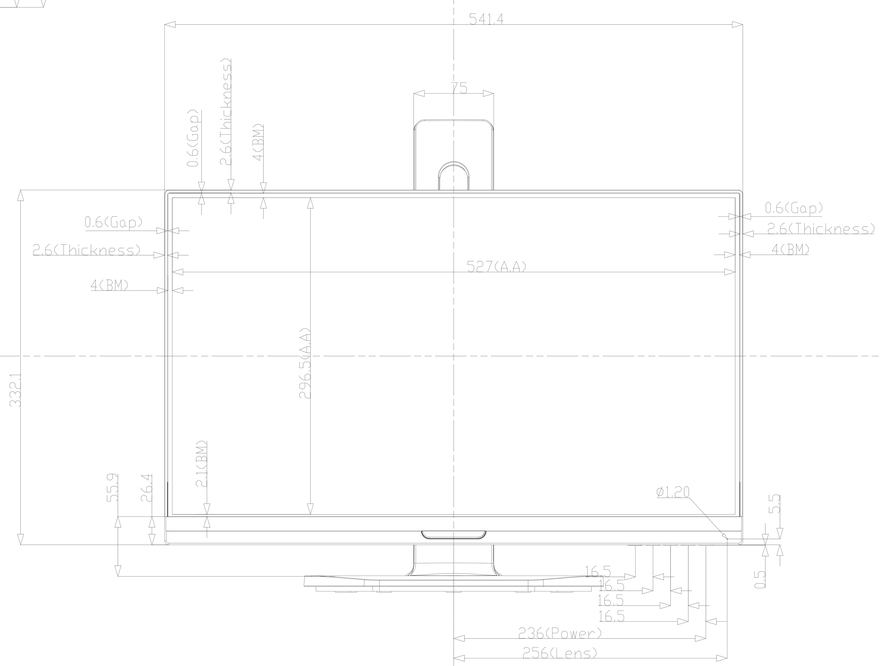

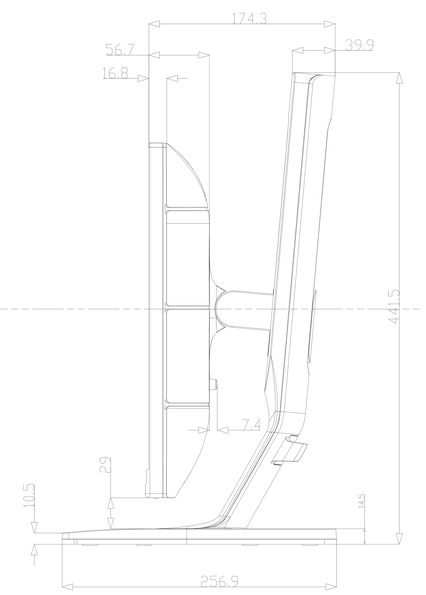

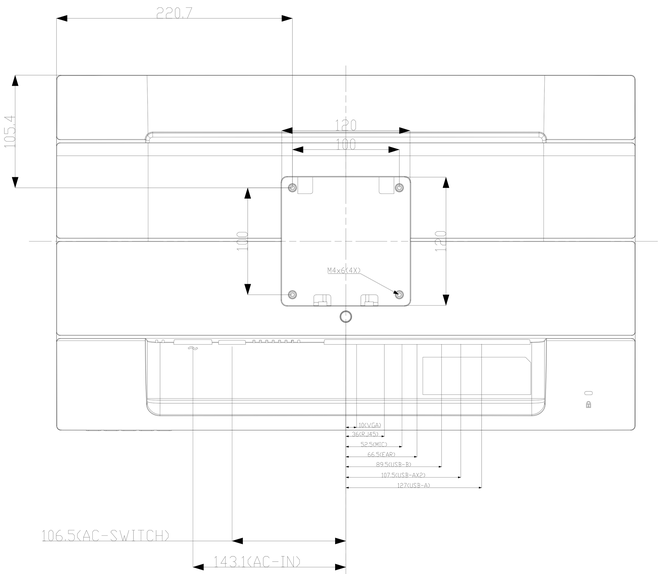

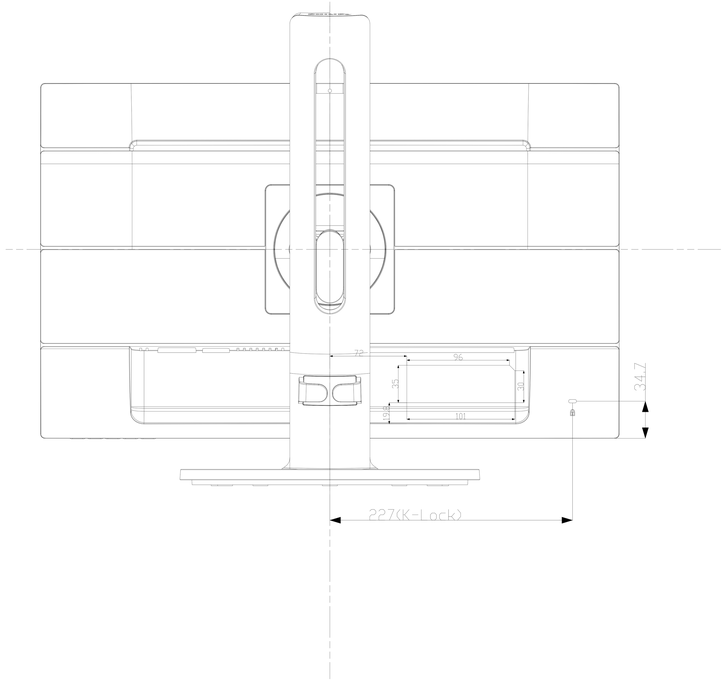

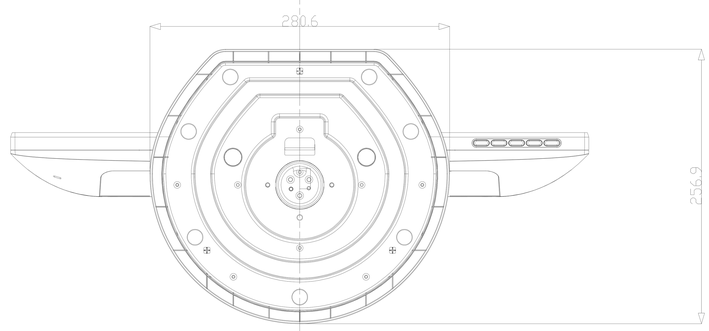

MODEL : 241B7QUPEB		DRAWING : Xiso.Li	
241B7QUPEB SHT191			
NAME Xiso.Li	SUPERS :		
TY	CHECK	DATE 2016.10.19	© PHILIPS ELECTRONICS INDUSTRIES (TAIWAN) CO., LTD.